DO NOT SCALE DRAWING - IF IN DOUBT ASK

Ref notes:-
H12 inlet adapter 300mm
AD12 inlet 300mm
New valve 300mm

H VALVE IS 390MM OD AND
AD IS 406MM OD.

'STANDARD' FLANGE DRILLING OPTION 1 - H Valve:-

8 HOLES M8 EQUI-SPACED AS SHOWN ON A 369mm PCD

'ALTERNATIVE' FLANGE DRILLING OPTION 2 - AD Valve:-

8 HOLES M10 EQUI-SPACED ON A 378mm PCD

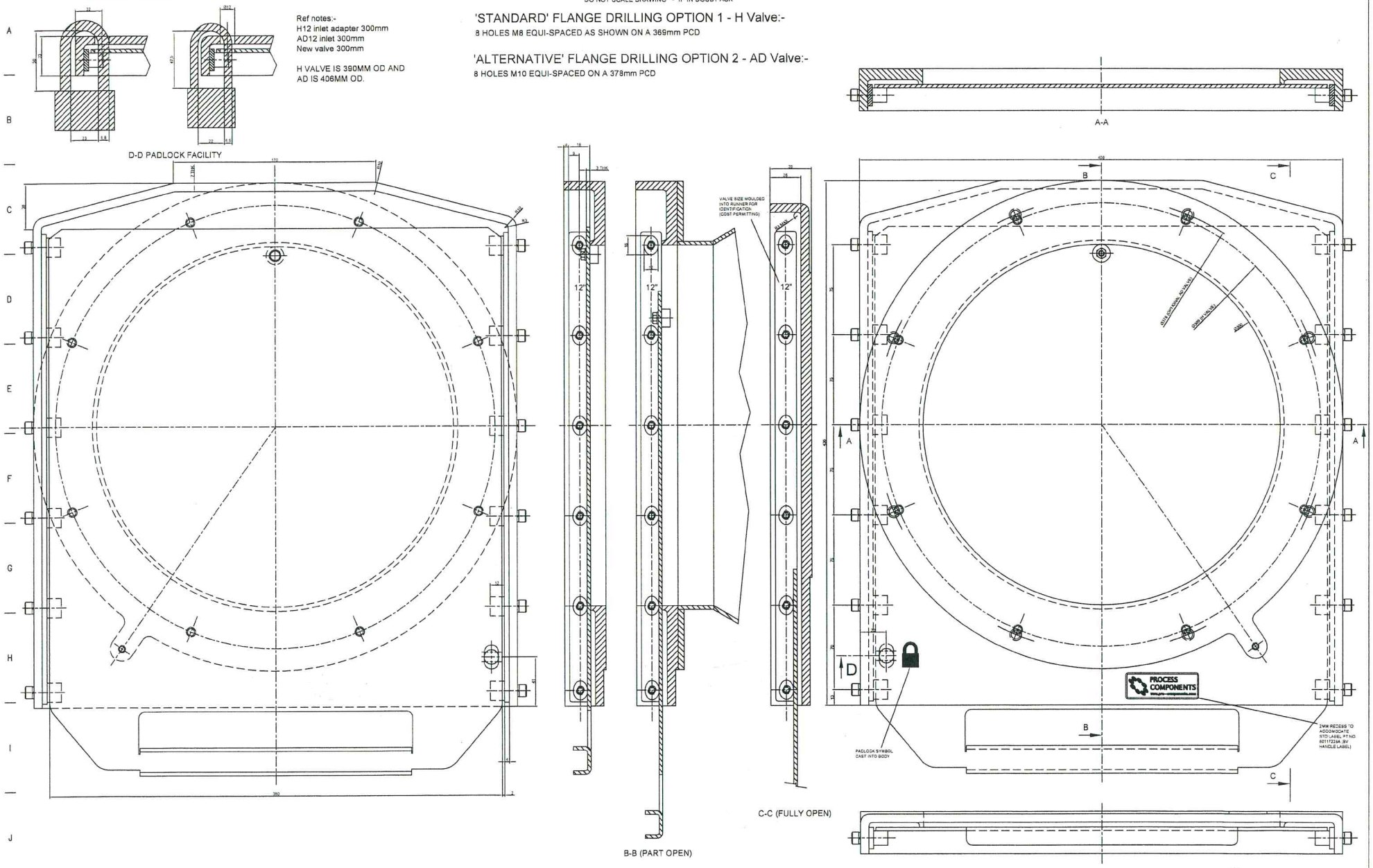

THIS DRAWING IS THE PROPERTY OF PROCESS COMPONENTS LTD AND MUST NOT BE COPIED OR SHOWN TO A THIRD PARTY WITHOUT THE WRITTEN CONSENT OF THIS COMPANY. ©

NOT PLOTTED

DRAWING SPECIFICATIONS
UNLESS OTHERWISE STATED
Screw threads to BS3643
ISO Metric Coarse Pitch Series (Medium Fit)
Surface Finish to BS1134 in micrometres
Welding Symbols to BS499 Part 2
Dimension & Geometrical Tolerances to BS308
Limits & Fits to BS4500
Remove all sharp edges and burrs

TOLERANCE SPECIFICATIONS
UNLESS OTHERWISE STATED
SHEET METAL DIMENSIONS: 0 to 300 ± 1.00; 300 to 1000 ± 2.00; Over 1000 ± 3.00
MACHINED DIMENSIONS: 0 to 150 ± 0.30; Over 150 ± 0.80
ANGULAR DIMENSIONS: ± 0°-30'
UNMACHINED DIMENSIONS: 0 to 150 ± 0.50; Over 150 ± 1.50

ALL DIMENSIONS IN MILLIMETRES

THIRD ANGLE PROJECTION

For all material, weld and finish specifications refer to purchase/works order unless stated otherwise

ISSUE P2 SLOPING EDGES NOW ON END OF VALVE. PADLOCK SLOT MODIFIED PB - 23/02/2011	ISSUE P1 FIRST ISSUE - FOR REVIEW PB - 08/02/2011	PROCESSCOMPONENTS MUCON (SEA) GARDNER (PTS) Chapelfield Industrial Estate, Bank Street, Mexborough, South Yorkshire S64 9JT. FAX Tel: +44 (0) 1423 4 72002 Fax: +44 (0) 1423 412001 EMAIL: sales@pcs-components.com WEB: www.pcs-components.com
DRAWN BY: P. Blackburn	CHECKED BY	APPROVED BY
TITLE: GA - 300mm/12" DIA MANUAL SLIDE VALVE	SCALE: 1:1	DATE: 08/02/2011
DRAWING: A0 D_SV_02	ISSUE: P2	

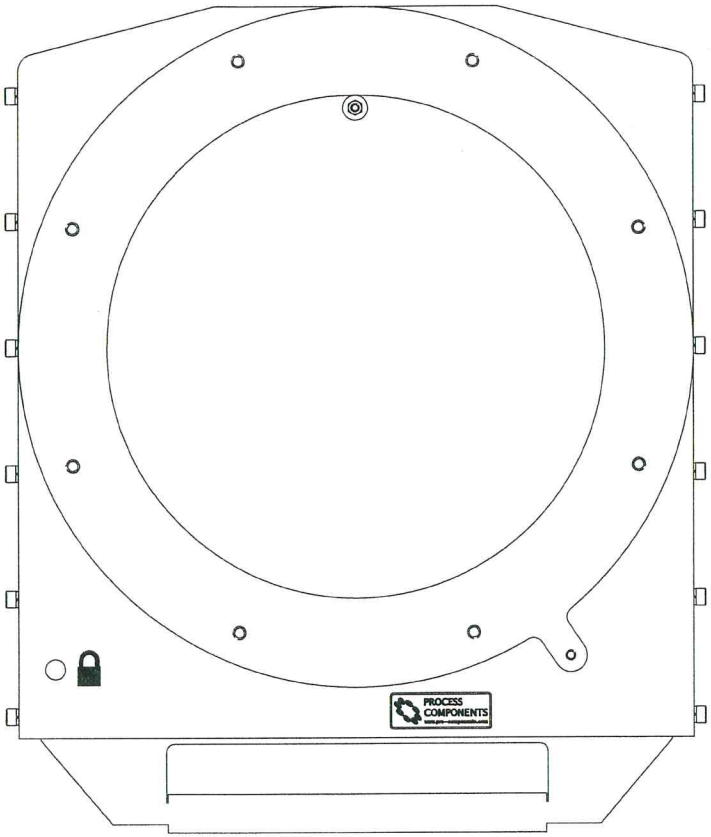
PROCESS
COMPONENTS

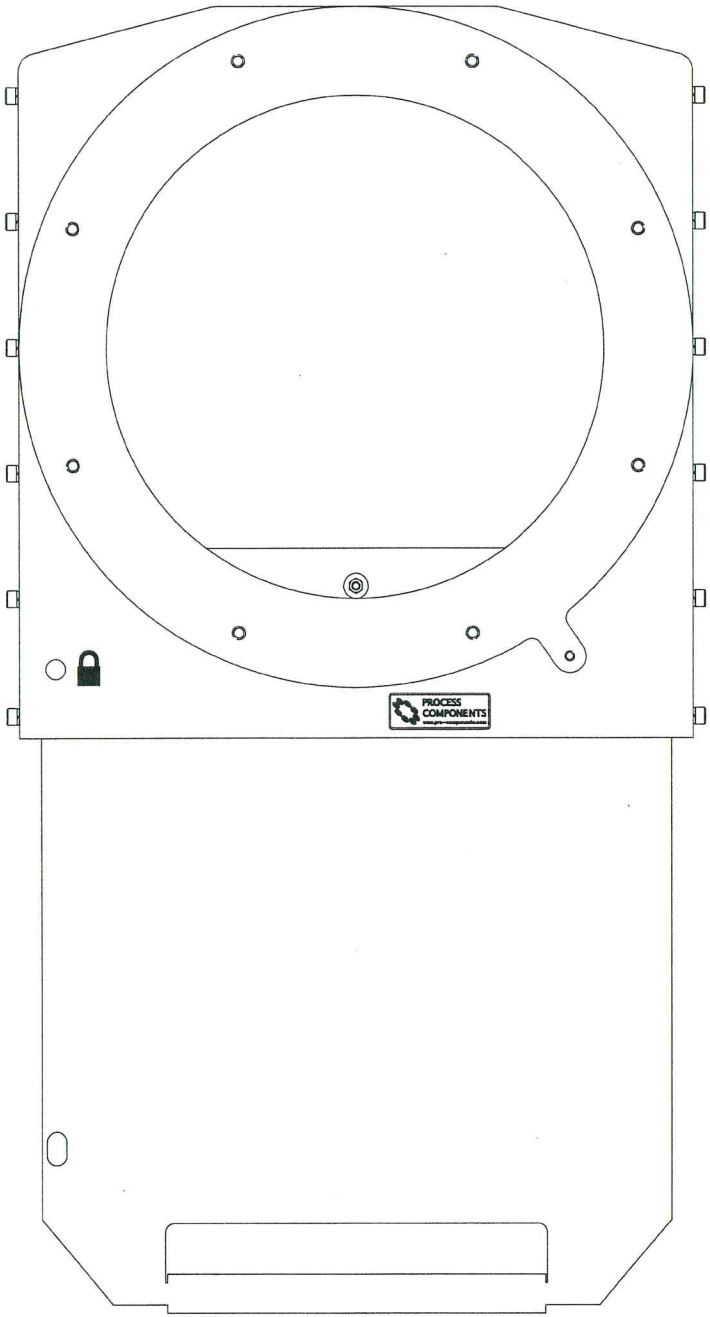
PROCESS
COMPONENTS